User's Guide
SLOU219–February 2008

TAS5601 Digital Power Amplifier With MC5601 Modulator Kit

This manual describes the operation of the TAS5601EVM evaluation module from Texas Instruments.

Contents

1 Purpose of This Document 3
2 Overview 3
  2.1 TAS5601EVM and MC5601 Features 4
3 Installation 5
  3.1 Software Installation 5
  3.2 EVM Installation 5
4 Using the EVM Software 7
  4.1 Getting Started 7
  4.2 Setup Tab 7
  4.3 Volume Tab 12
5 EQ/DRC Tool Installation 13
  5.1 TI ALE Guide for TAS570x 13
  5.2 Edit EQ Filter 14
  5.3 Edit and Generate DRC Data 17
  5.4 Save EQ/DRC/Alpha Data to File 19
6 Jumpers and Control Utilities 20
  6.1 Switches 20
7 Board Layouts, Bill of Materials, and Schematics 21
  7.1 TAS5601EVM Board Layouts 21
  7.2 Bill of Materials 22
  7.3 Schematics 22
8 Related Documentation From Texas Instruments 23

List of Figures

1 TAS5601EVM4 Printed-Circuit Board 3
2 EVM Controller Board (MC5601) 4
3 Complete System and EVM Signal Path Overview 4
4 Setup Tab 7
5 Volume Tab 8
6 EQ Viewer Tab 9
7 DRC Viewer Tab 9
8 EQ/DRC Demo Tab 10
9 I^2C Single Byte 11
10 I^2C Multiple Byte 11
11 Volume Control Tab 12
12 Top Silk Screen View 21
13 Bottom Silk Screen View 21

List of Tables

1 Recommended Power Supplies 5
2 Bill of Materials for TAS5601EVM 22

3 Related Documentation from Texas Instruments 23

1 Purpose of This Document

This user's guide describes how to use the TAS5601 evaluation module (EVM) to evaluate performance of the TAS5601 device. The document contains the following.

- Details of how to properly set up an MC5601 modulator kit.
- Details of how to install and use the GUI to program the TAS5601

2 Overview

The TAS5601EVM evaluation module (EVM) demonstrates the TAS5601 device from Texas Instruments.

The TAS5601 contains a class-D audio power amplifier. For detailed information about the TAS5601 device, review the device data sheet (SLAS585). The TAS5601 is designed to drive two 8-Ω loudspeakers at up to 20 W per channel (10% THD+N) in BTL configuration from an 18-V supply. Figure 2 shows a picture of the MC5601 modulator kit. The MC5601 provides power, data, and I^2C control to the TAS5601EVM board.

The EVM software with its graphic user interface facilitates evaluation by providing access to the TAS5601 registers through a USB port. Refer to the *Using the EVM Software* section for further details.

Figure 1 shows a picture of the TAS5601EVM evaluation module.

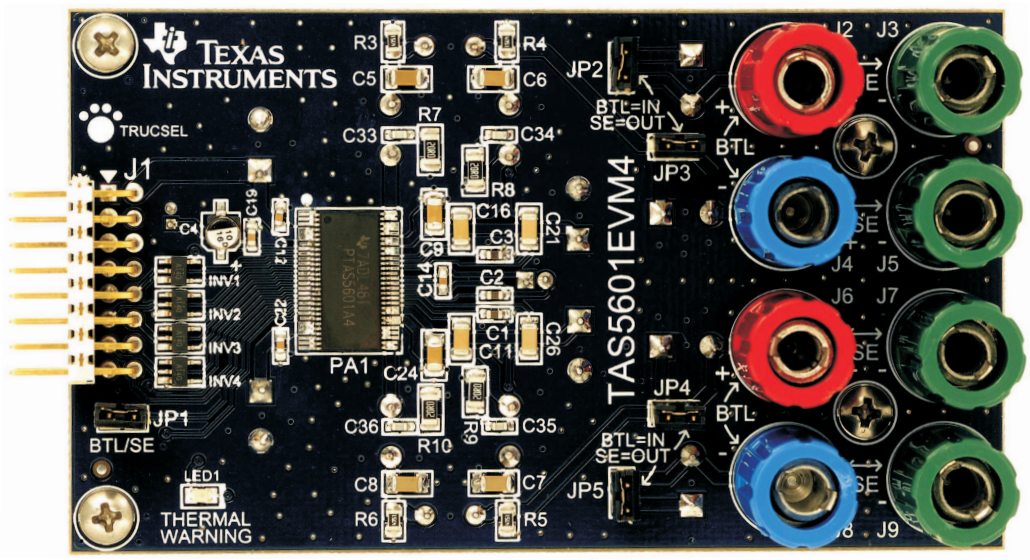

Figure 1. TAS5601EVM4 Printed-Circuit Board

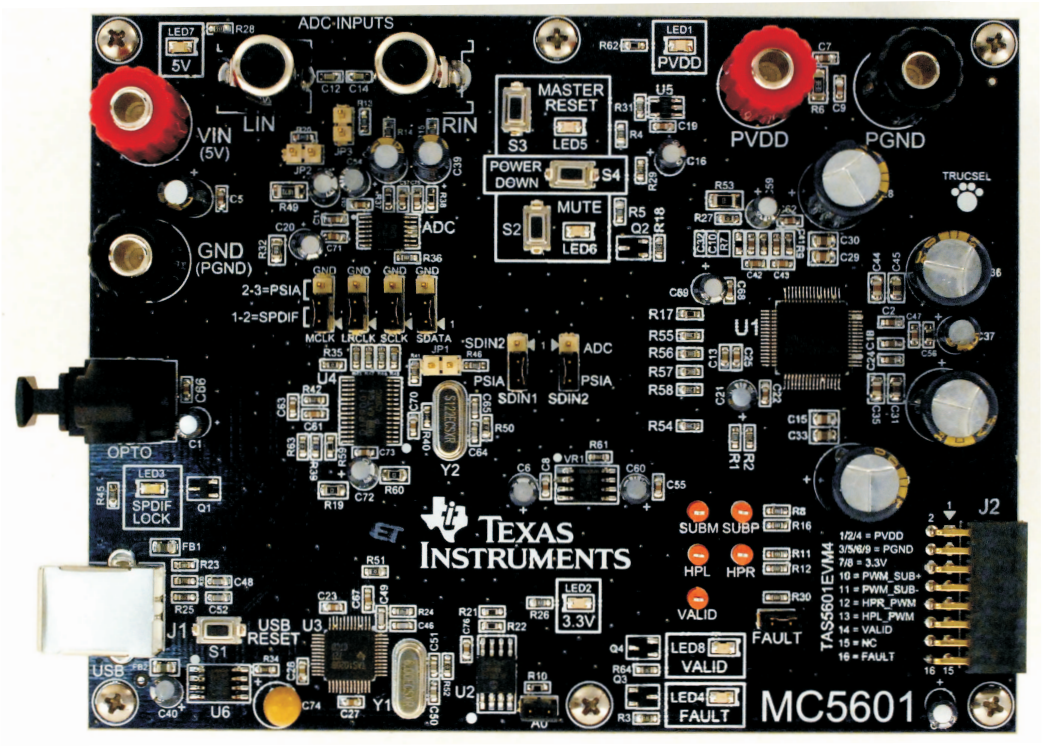

Figure 2. EVM Controller Board (MC5601)

The TAS5601EVM is a complete 2-channel digital audio amplifier system. Also included in the kit is a MC5601 board that includes a USB interface, a digital input (SPDIF), analog inputs via the ADC, and other features like a mute function and power down. The TAS5601EVM can be used as a stand-alone board by wiring it into a system or it can be connected to the MC5601 board for a complete evaluation platform.

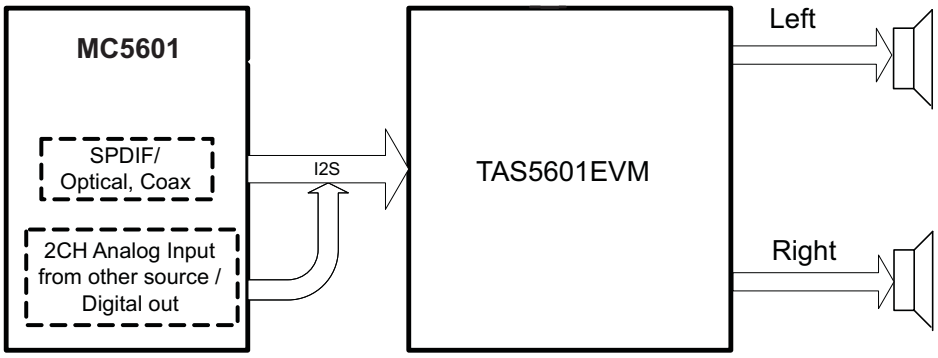

Figure 3. Complete System and EVM Signal Path Overview

2.1 TAS5601EVM and MC5601 Features

- Self-contained protection systems and control pins
- USB interface
- Standard I^2S data input using an optical input
- Analog input through analog to digital converter
- Double-sided plated-through PCB, 2-oz copper

- Access to control signal gain and data format through EVM-software graphic user interface (GUI)

3 Installation

This section describes the software and EVM installation.

3.1 Software Installation

Execute the GUI install program setup.exe, found in the TAS570x GUI directory in the provided compact disc. Once the program is installed, the program group and shortcut icon is created in Start → Program →Texas Instruments Inc → TAS570x Interface.

3.2 EVM Installation

The following are the basic tools for the initial EVM power up.

- 5 V, 1 A power supply (VIN)
- 10–26 V, 4 A power supply (PVDD)
- Banana-style test leads for power supplies and speakers
- Optical cable for SPDIF interface based on signal source
- Coaxial cables with phono plugs for analog audio if digital audio is unavailable
- USB cable
- EVM software
- Two 8-Ω speakers or loads

The following sections describe the TAS5601EVM board in regards to power supply (PSU) and system interfaces.

3.2.1 PSU Interface

The TAS5601EVM module is powered by two power supplies connected to the MC5601 controller board: a 5-V power supply (VIN) and a 10-V to 26-V (PVCC) power supply. The 3.3-V level is generated on the board by a voltage regulator from the 5-V supply.

Note: The power-supply cable length must be minimized. Increasing the length of the PSU cable increases the distortion of the amplifier at high output levels and low frequencies.

Table 1. Recommended Power Supplies

Description	Voltage Limitations (8 Ω load)	Current Recommendations
System power supply	5 V	1 A
Output power stage supply	10–26 V	4 A [(1)]

(1) The rated current correspond to 2 channels full scale.

3.2.2 Loudspeaker Connectors

CAUTION

In BTL connection, both positive and negative speaker outputs are floating and may not be connected to ground (e.g., through an oscilloscope).

For BTL:

- Connect the left speaker wires to the corresponding metal binding posts marked J2 and J4 on the TAS5601EVM board.
- Connect the right speaker wires to the corresponding metal binding posts marked J6 and J8 on TAS5601EVM board.

For SE:

- Connect the four sets of speaker wires to the pairs J2-J3, J4-J5, J6-J7, and J8-J9.

3.2.3 USB Interface

The TAS5601 registers are accessed through I^2C bus lines SDA and SCL. The USB circuit and USB connector on the MC5601 board facilitates the connection between a host computer and the device. The EVM USB circuit is powered by the 5-V USB line of the host PC, and is independent of the power supplies available on the board. The USB device used is a TAS1020B from Texas Instruments.

3.2.4 Digital Audio Interface SPDIF (J1/OPTO)

The Digital Audio Interface accepts digital audio data using the I^2S protocol. See the TAS5706 data sheet for more information.

The OPTO connector is the SPDIF interface on the MC5601 board. When the optical cable is connected and the signal source is powered up, verify that the SPDIF lock indicator (blue LED3) illuminates, confirming that there is a viable signal available to the device. Install the four clock/data jumpers across the middle pin and the pin marked SPDIF.

For detailed information on how the data and clocks are provided to the TAS5601, see the schematic appearing at the end of this document and the DIR9001 device data sheet.

3.2.5 ADC Interface

In the absence of a digital signal source, the PCM1808 ADC may be used to convert an analog audio signal to a digital signal to the TAS5601. The DIR9001 still provides clock signals to the ADC in this process. The DIR9001 oscillator frequency (Y2) determines the sampling frequency in the absence of a digital signal. If the OSC frequency is 24 MHz, the sampling frequency is set at 96 kHz; if OSC is set at 12 MHz, the sampling frequency defaults to 48 kHz when there is no signal on the SPDIF input terminals. A 12-MHz crystal is installed on the MC5601 board. The ADC is an additional feature of this board to provide flexibility in sourcing an audio signal to the TAS5601. Review the PCM1808 data sheet for a detailed description of the ADC on this EVM. Install the jumper on SDW2 across the middle pin and the pin marked ADC.

3.2.6 Board Power-Up General Guidelines

Connect the MC5601 and the TAS5601EVM boards by locating pin 1 on each board, indicated by a small white triangle. The TAS5601EVM plugs into the MC5601 board. Pin 1 on each board should be connected to each other.

Install the EVM software on the PC before powering up the board. After connecting the loudspeakers or other loads, power supplies, and the data line, power up the 5-V power supply first; then power up the PVDD power supply. It is recommended initially to set the PVDD level to 10 V, then ramp it up to 20 V to verify cable connections.

4 Using the EVM Software

The EVM software provides access to the TAS5706 configuration and status registers through a GUI window with 7 tabs for the various EVM parameters.

4.1 Getting Started

Open the zip file (.zzp) on the installation CD shipped with the EVM. Extract the files and run the setup.exe file to install the EVM software. After the GUI is installed, power up the board, and connect the USB cable. A new-hardware alert should appear at the bottom right hand corner of the display. If the USB driver is not installed, follow the instructions on the USB Wizard to install the USB driver.

4.2 Setup Tab

After the EVM software is installed and the EVM powered up, the status bar should be green. Clicking on the setup tab displays the window shown in Figure 4.

Then perform the following steps.

1. Select the device **TAS5706.**
2. Select **2-Channel BTL (BD mode)**.
3. Click the **Initialize** button, and uncheck **All Channel Shutdown** box.
4. Select Volume tab. Unmute master volume and slide the volume bar to preferred volume setting (see Figure 5).

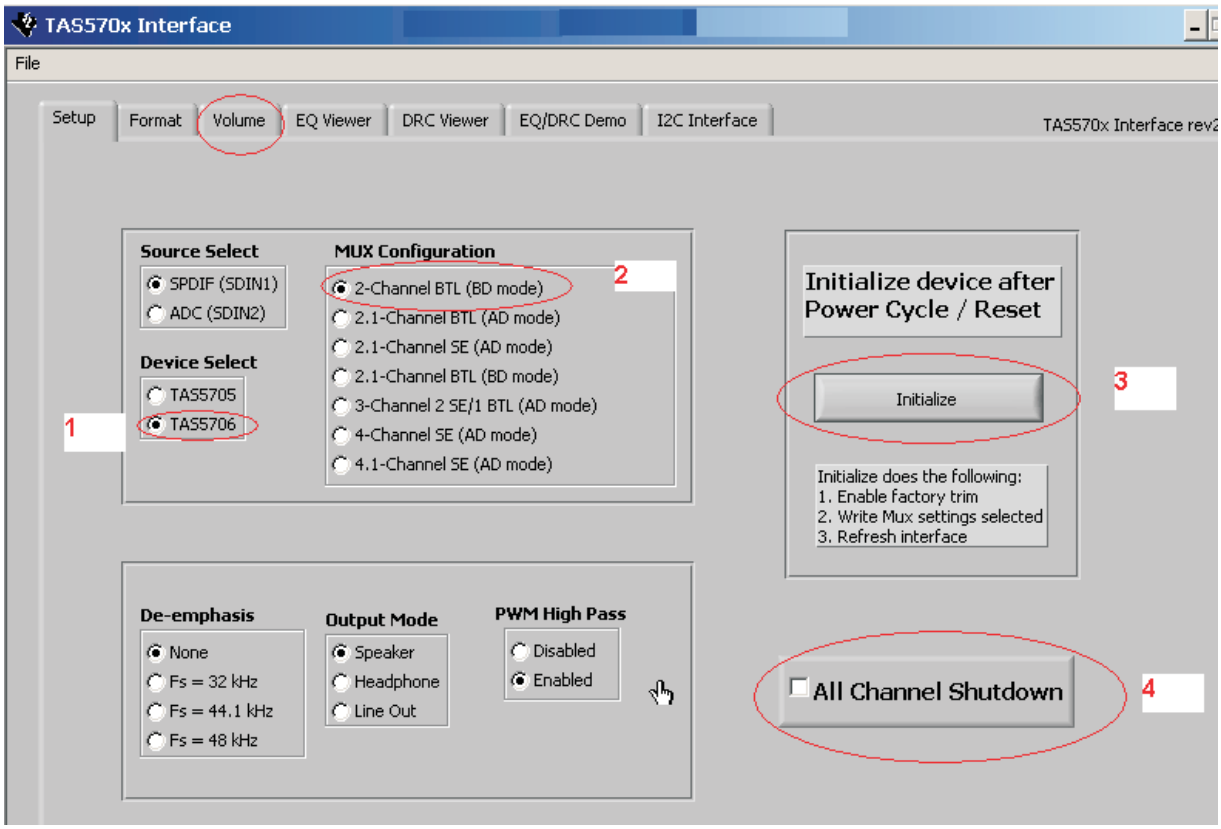

Figure 4. Setup Tab

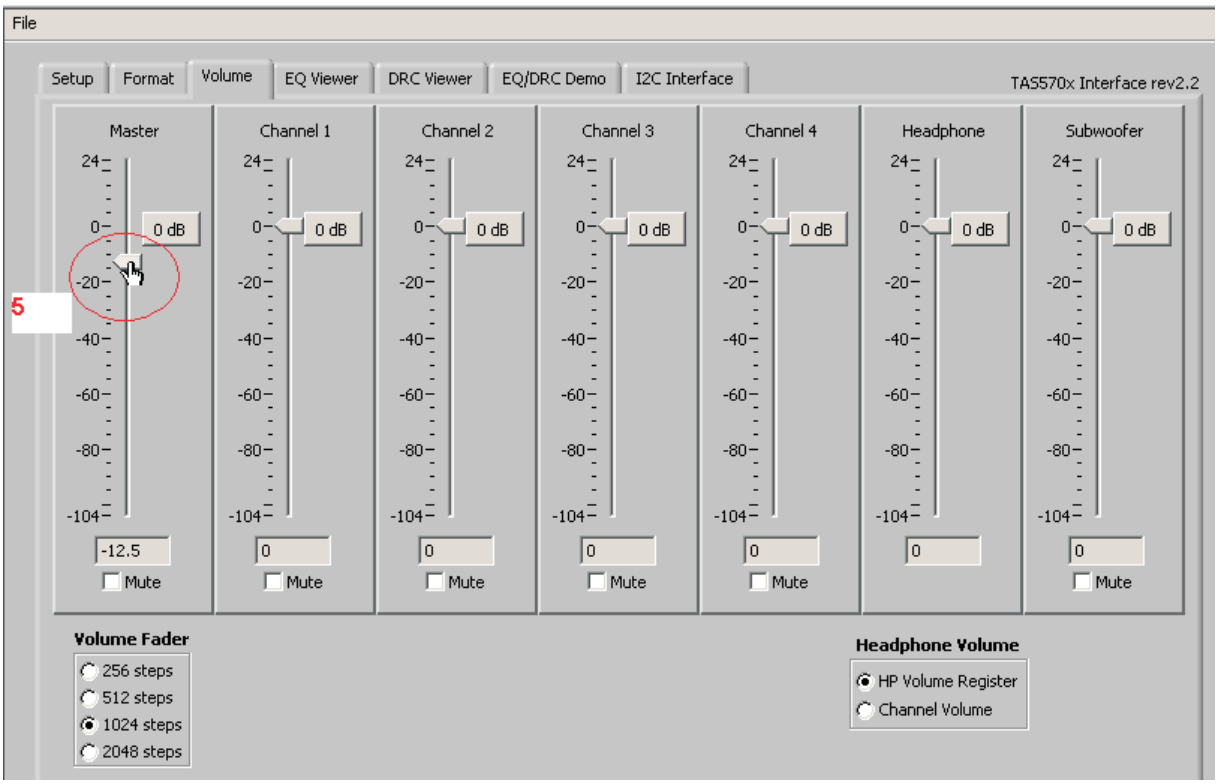

Figure 5. Volume Tab

4.2.1 All Channel Shutdown

System comes up with all channel shut down asserted.

To exit *All Channel Shutdown*, select *Setup* Tab, unselect *All Channel Shutdown*.

4.2.2 Advanced Features : EQ and DRC

EQ and DRC can be designed in ALE (Automatic Loudspeaker Equalization tool).See the *EQ/DRC Tool Installation* section that appears later in this document. The filters designed in ALE can be saved into a file. Load the ALE output using File -> Load the ALE File and select the ALE output file . Select *Autobank switch ON* in the EQ tab. The EQ and DRC parameters can be viewed by selecting the EQ viewer or DRC tabs. Coefficients are loaded into DAP in the autobank switch only when a legitimate sample rate is applied. EQ and DRC are loaded before the step described in Section 4.2.1.

4.2.2.1 EQ Loading and Viewing

EQ coefficients can be generated using ALE. (See ALE User's Guide.) Once EQ coefficients are generated, they can be loaded into the part using File→Load ALE using the TAS570x GUI.

4.2.2.2 DRC Coefficient Loading

DRC coefficients can be generated using ALE and can be loaded using File→Load ALE. Normally, both EQ and DRC coefficients are created and saved as a single file from ALE. DRC1 (satellite channels) and DRC2 (subchannel) can be enabled and disabled using the toggle button in this tab.

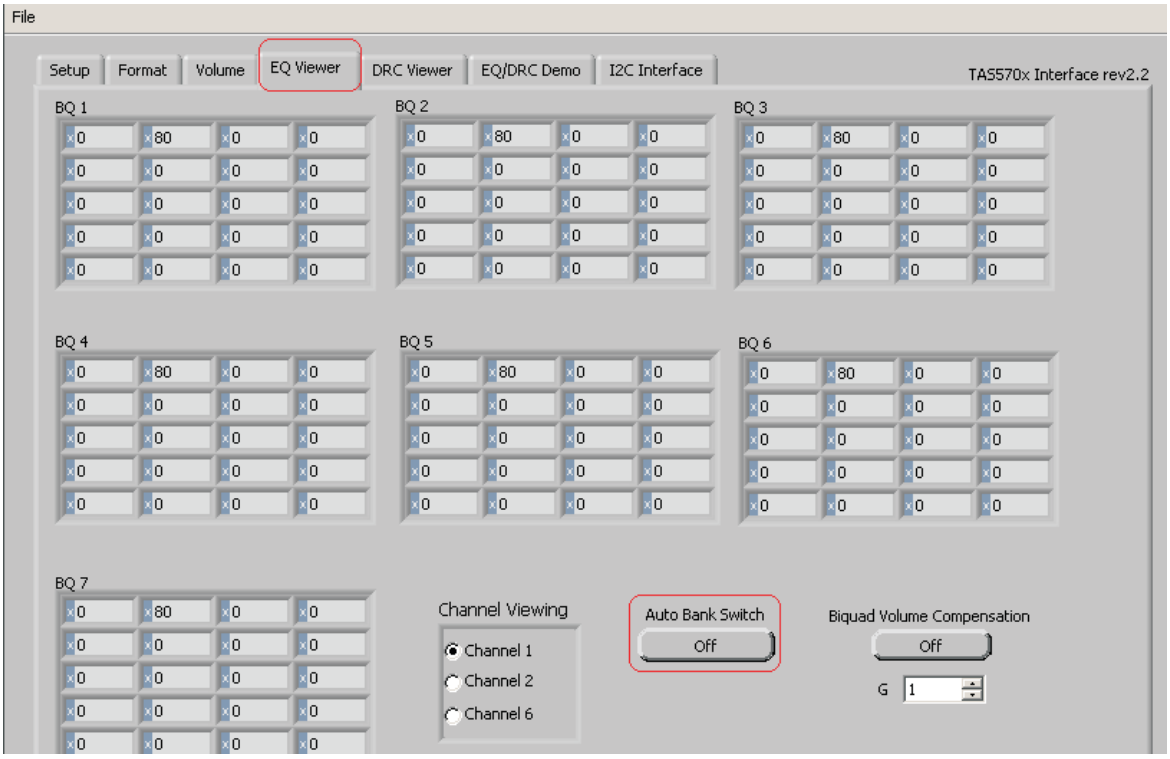

Figure 6. EQ Viewer Tab

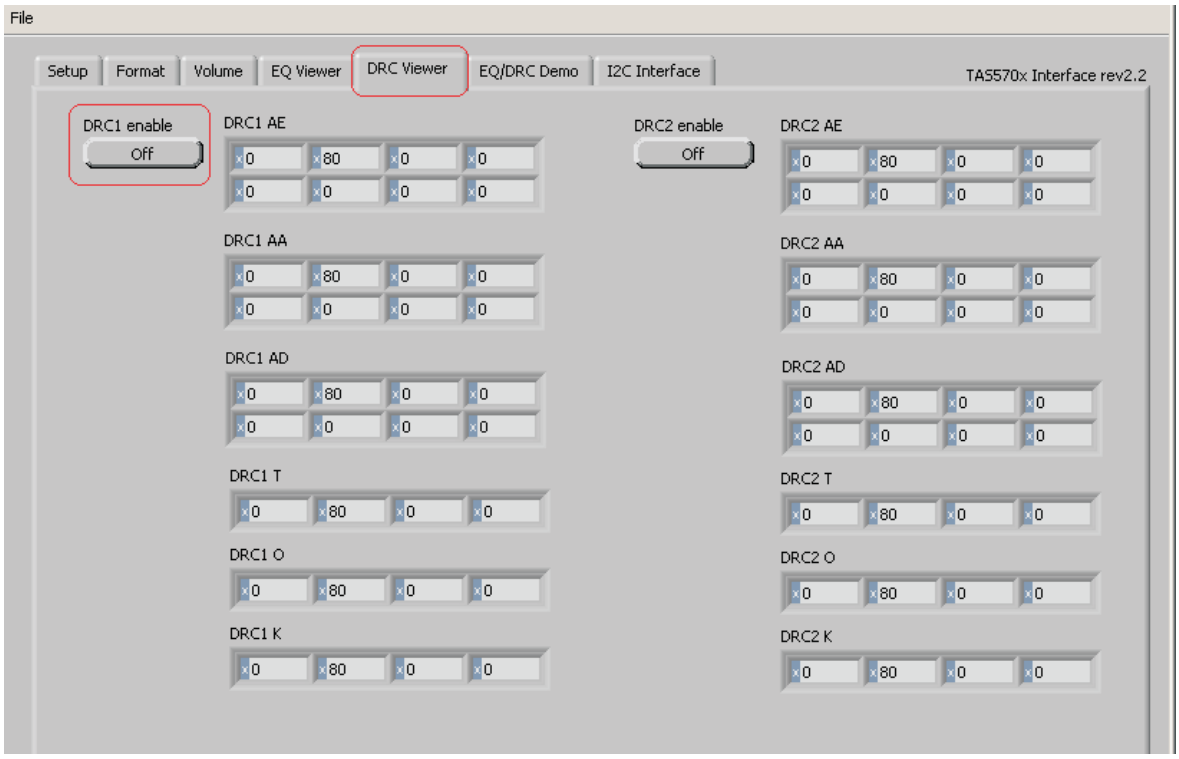

Figure 7. DRC Viewer Tab

4.2.3 EQC/DRC Demo

This tab is used to compare different settings. Multiple EQ files can be loaded and switched back and forth for listening purposes to select the golden filters.

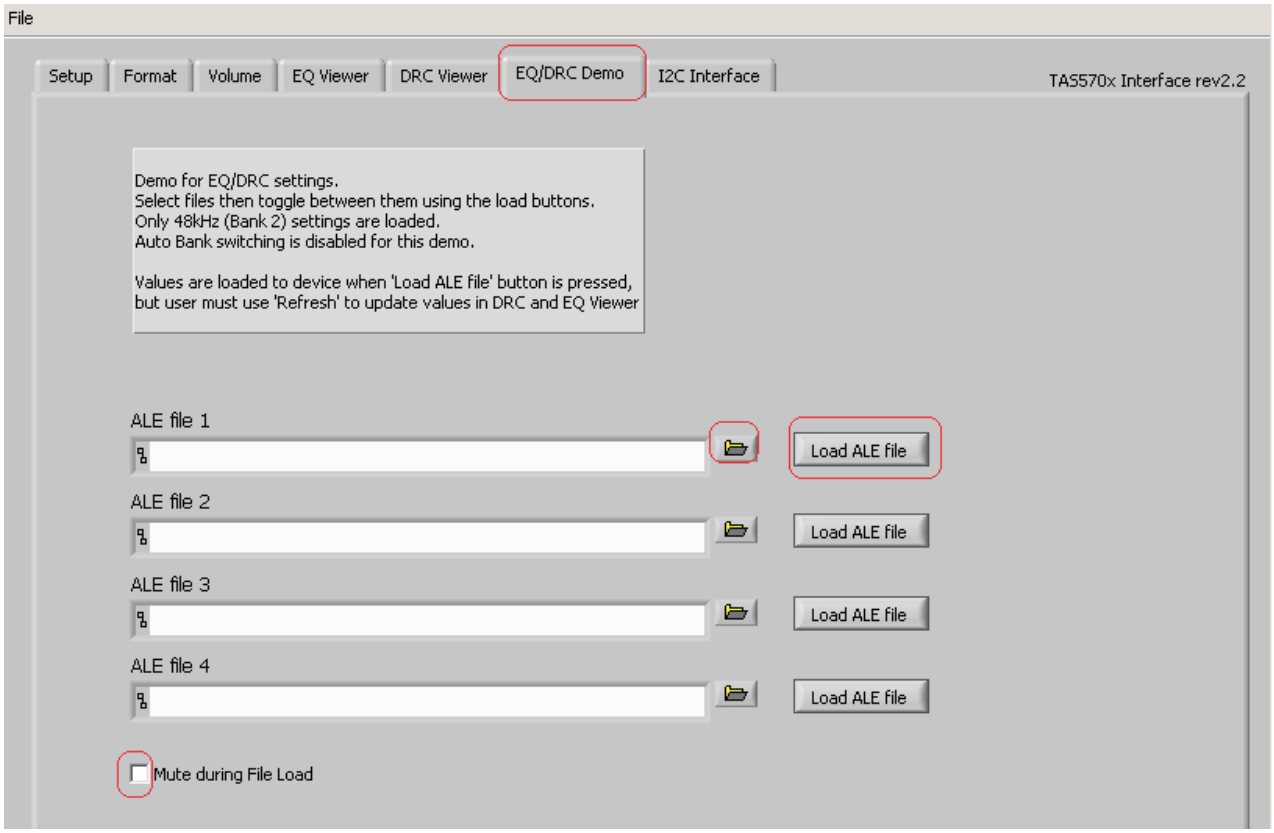

Figure 8. EQ/DRC Demo Tab

4.2.4 I ^{2}C Tab

Clicking on the I^{2}C Interface tab displays the window shown in Figure 9. This window can be used to perform single or multiple-byte I^{2}C accesses.

To *INITIALIZE*, use *File -> Load Script* and select the init file (see the attached TAS5601_ADmode_Initialize.ini; also attached is the BDMode initialize file).

Also, by writing the device address and selecting *NumBytes* and also selecting *Single Byte/Multiple Byte*, data can be written or read from the device.

4.2.4.1 I²C Writes and Reads

Data can be written to or read from the device. Single- or multiple-byte write/read is determined by the subaddress. If less than 0x20, single-byte access is required. Otherwise, multiple-byte access is used.

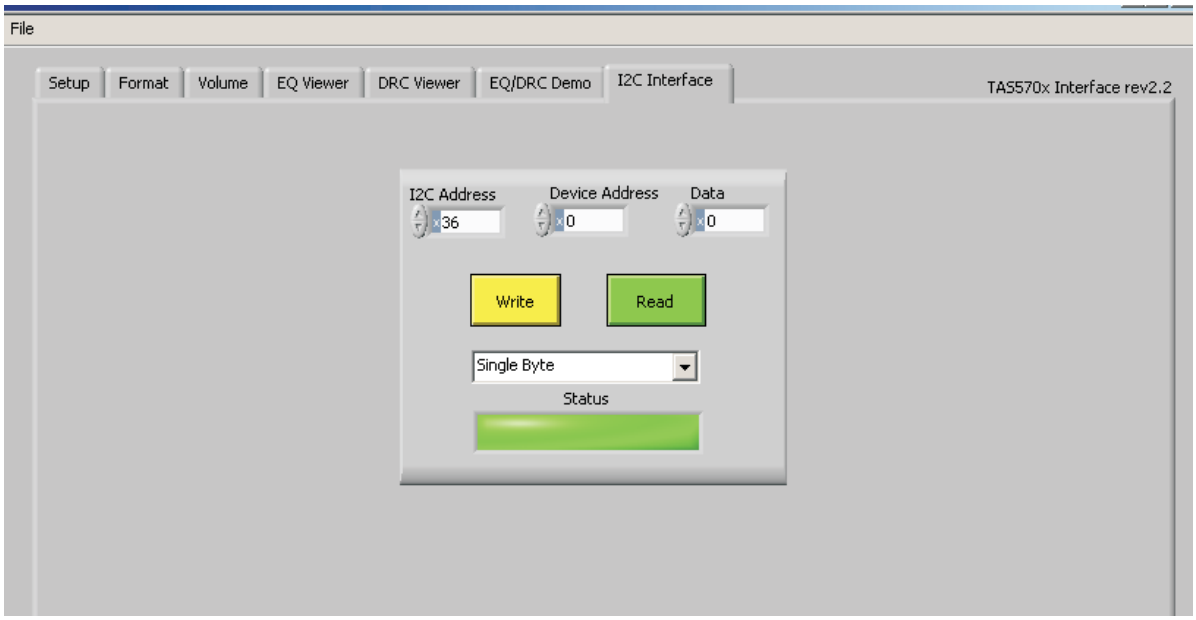

Figure 9. I²C Single Byte

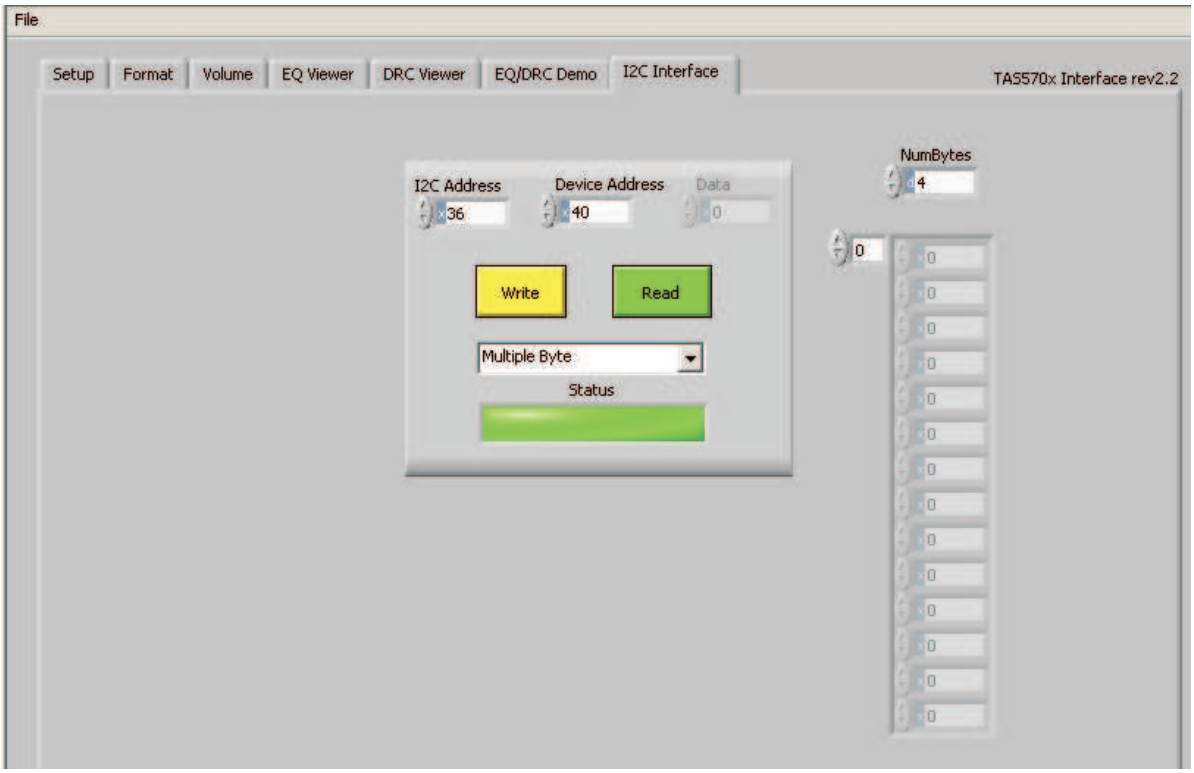

Figure 10. I²C Multiple Byte

4.3 Volume Tab

Select the Volume tab. Unmute the *Master* volume. Click on the *0 db* button.

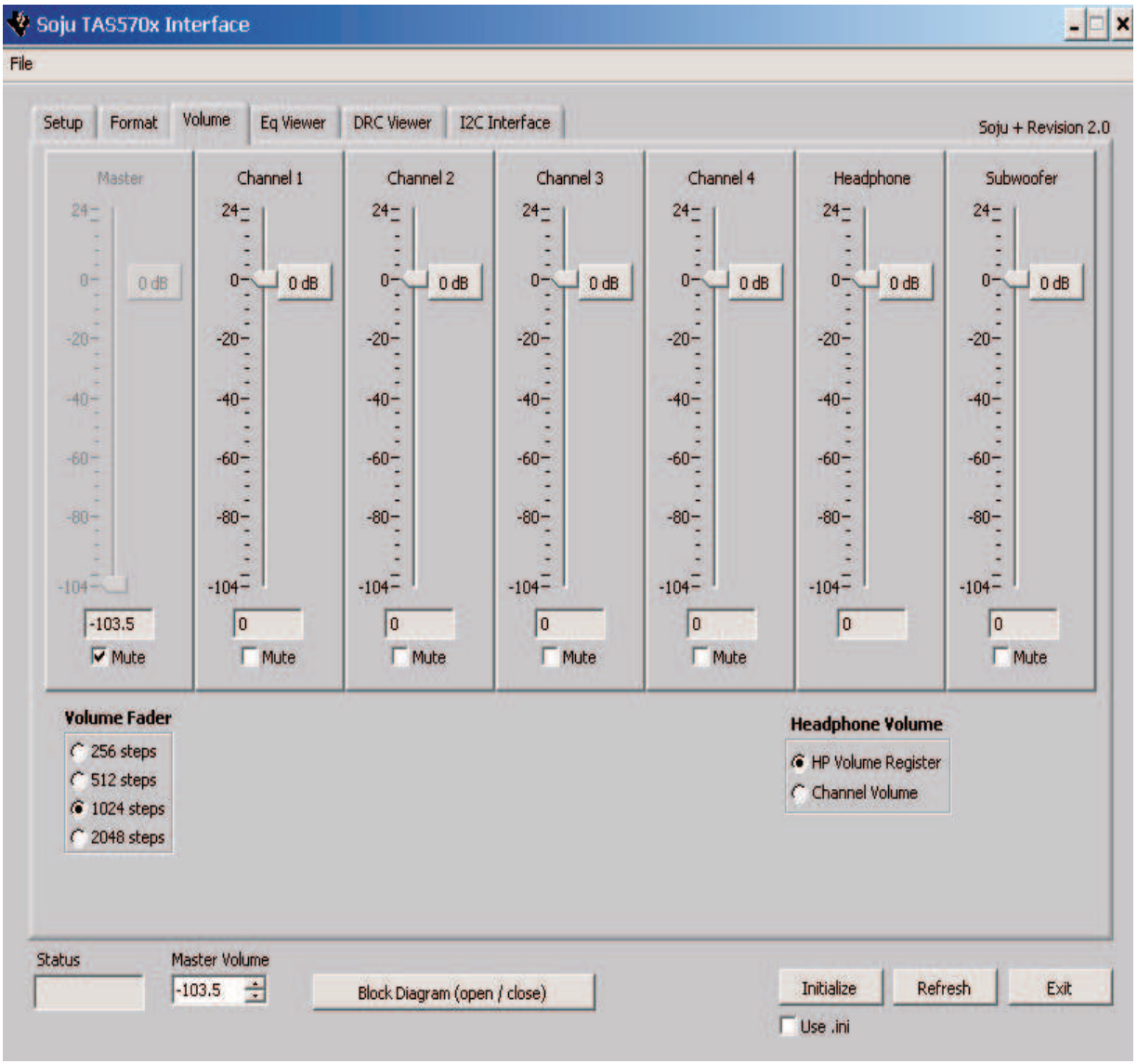

Figure 11. Volume Control Tab

5 EQ/DRC Tool Installation

If you want to use the Texas Instruments ALE tool to create filters for the EQ and DRC parameters, unzip the ale.zip file from the ALE directory located on the provided compact disc into your C:\\USERDATA\ directory.

You can open the ALE tool by double-clicking on the file: C:\\USERDATA\ale\Rel5.4\Release\Source\AutoSpeakerEq.exe.

5.1 TI ALE Guide for TAS570x

5.1.1 Overview

Once the TI ALE program starts, users can follow the next sections for instructions on how to set up, generate, and save the TAS570x EQ coefficients, Dynamic Range Compression data, and Alpha Filter data. For technical data related to filters, see the TAS570x data sheet.

5.1.2 Select Device

Click on Device pulldown menu, and select the TAS570X item as in the following illustration.

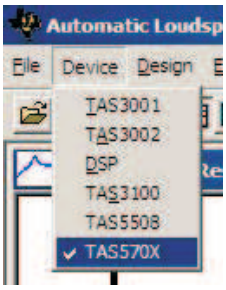

5.2 Edit EQ Filter

Click on Edit pulldown menu, and select Edit Filter Parameters as shown in the following illustration.

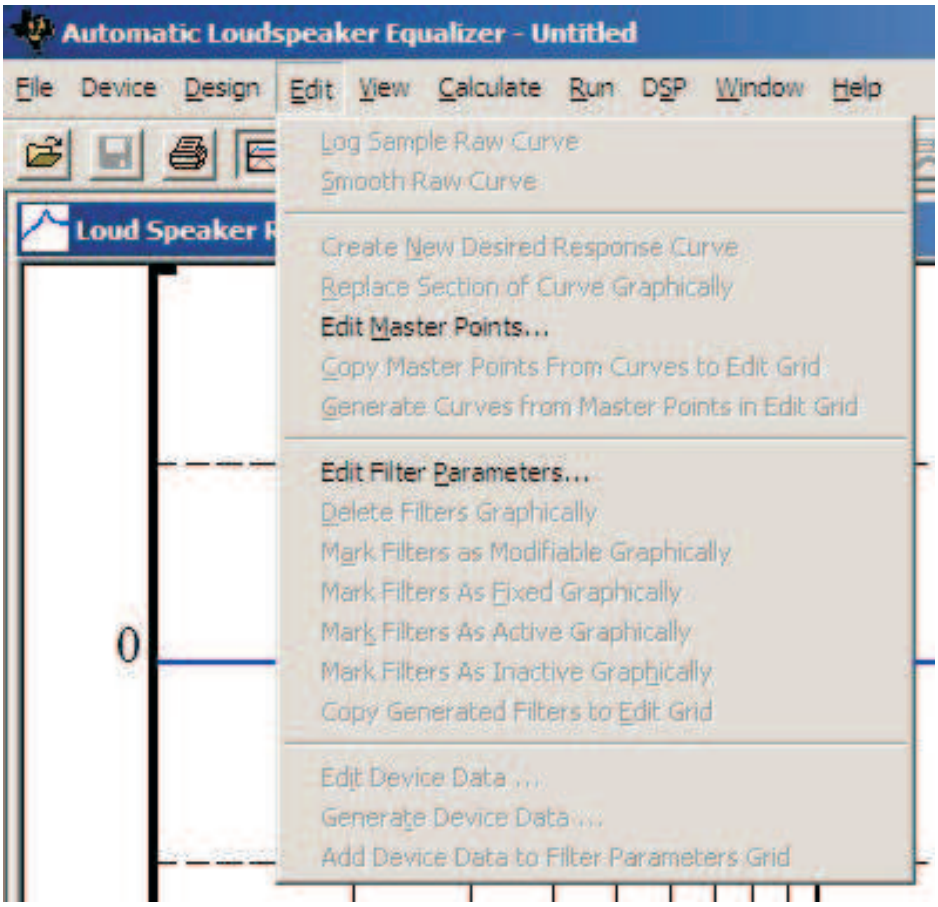

An EQ Filter dialog box appears as shown in the following illustration. Users then enter EQ-related data. Once finished, close the dialog box.

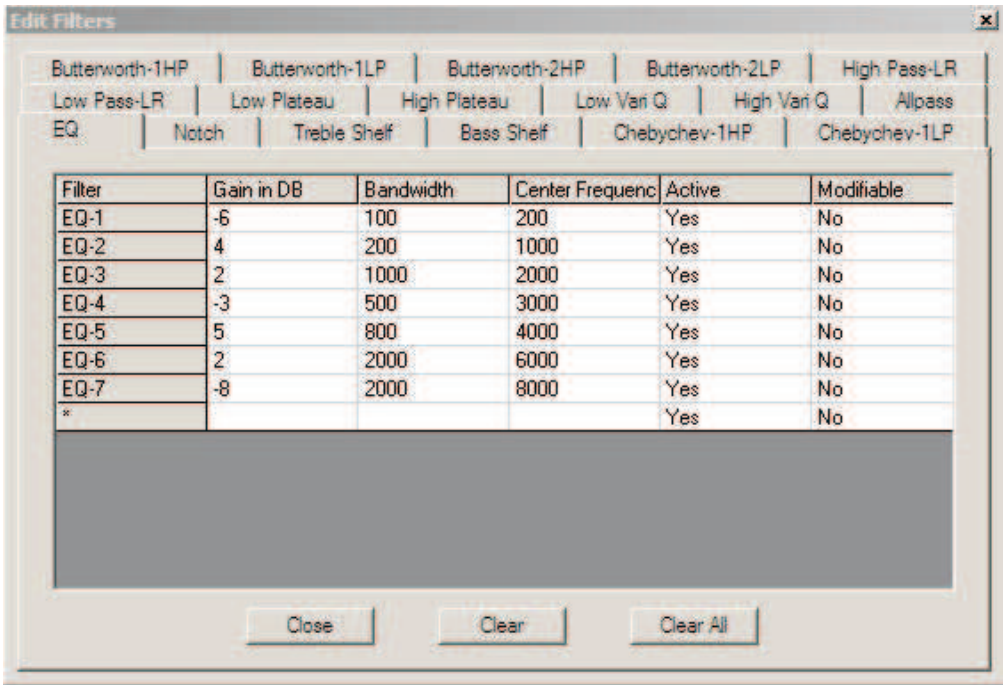

Filter	Gain in DB	Bandwidth	Center Frequenc	Active	Modifiable
EQ-1	-6	100	200	Yes	No
EQ-2	4	200	1000	Yes	No
EQ-3	2	1000	2000	Yes	No
EQ-4	-3	500	3000	Yes	No
EQ-5	5	800	4000	Yes	No
EQ-6	2	2000	6000	Yes	No
EQ-7	-8	2000	8000	Yes	No
*				Yes	No

For channels 1 and 2, users can create up to seven EQ data sets. For channel 6, users can create up to four EQ data sets. See the TAS570x data sheet for detailed technical information related to filters.

5.2.1 Display the Graph

To display the graph, select the Draw Filters icon as shown in the following figure. The graph is drawn and displayed in the window box

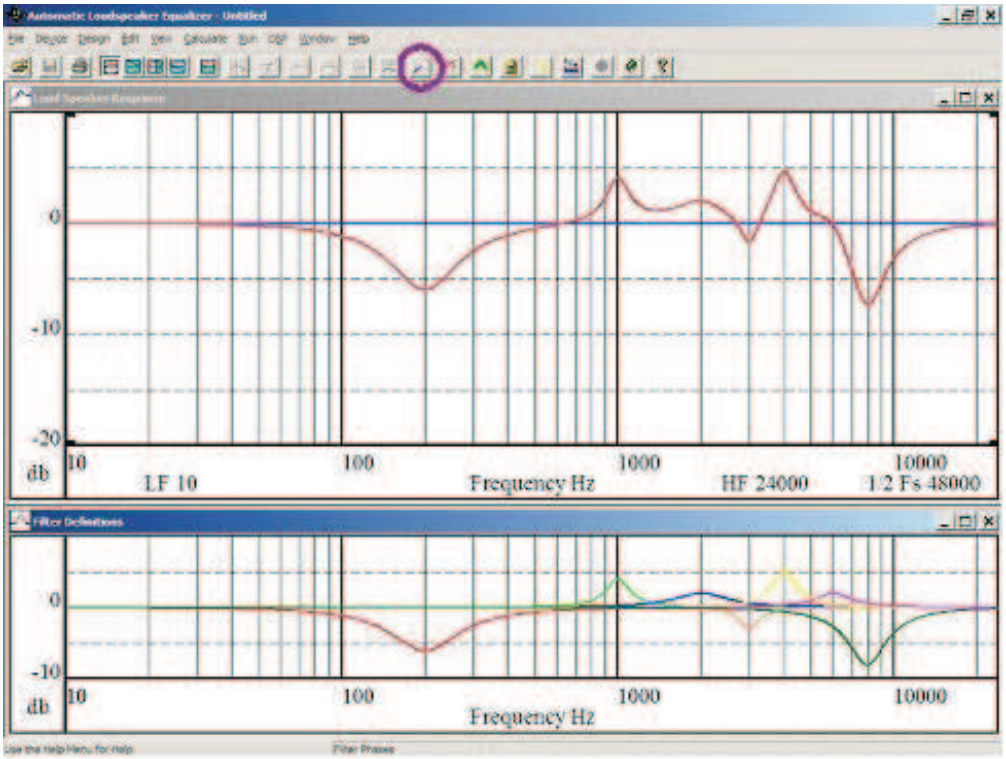

5.2.2 Generate EQ Filter Data

Click on the Edit pulldown menu, and select Generate Device Data as shown in the following illustration.

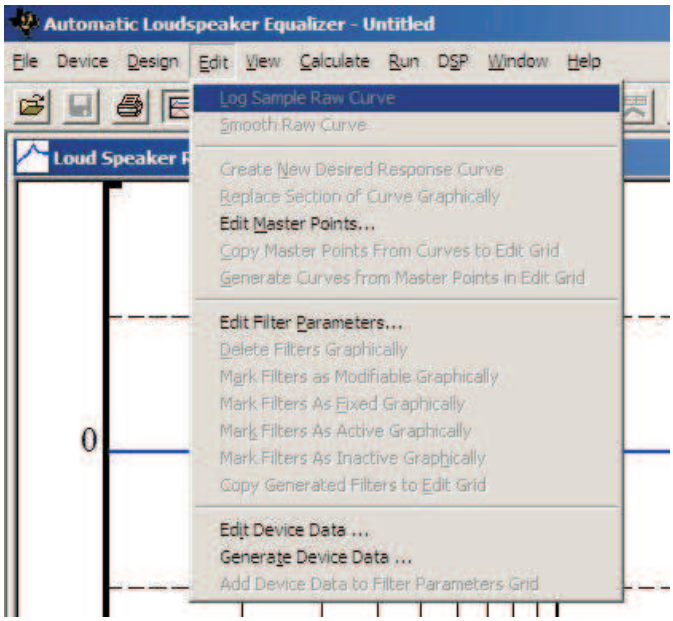

A Select Channel dialog box appears as shown in the following illustration.

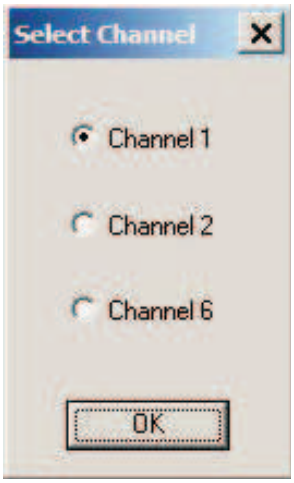

Users can select to which channel the EQ filter data is applied. Once the channel is selected, another box appears and displays the EQ Filter data for the selected channel. Click the Close button to close the display.

5.2.3 Save EQ Data to File

Click on the File pulldown menu, and select Save Device Program Data J as shown in the following illustration.

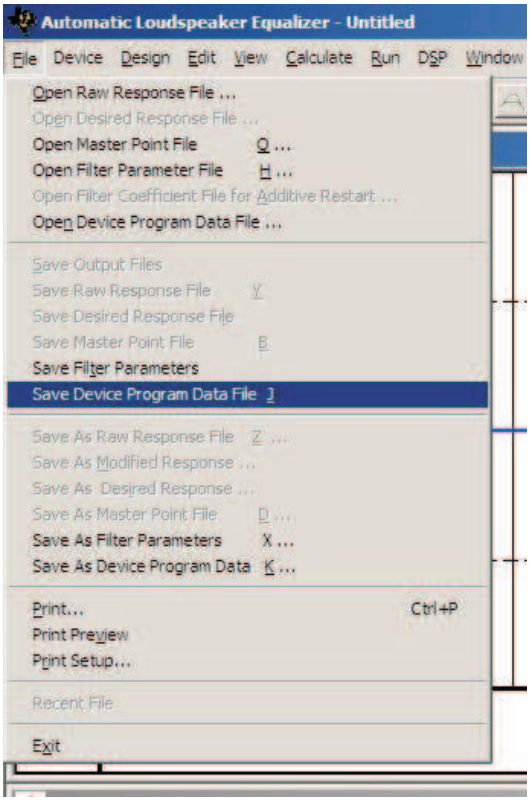

5.3 Edit and Generate DRC Data

Click on the pulldown menu, and select Dynamic Range Compression for TAS570X as shown in the following illustration.

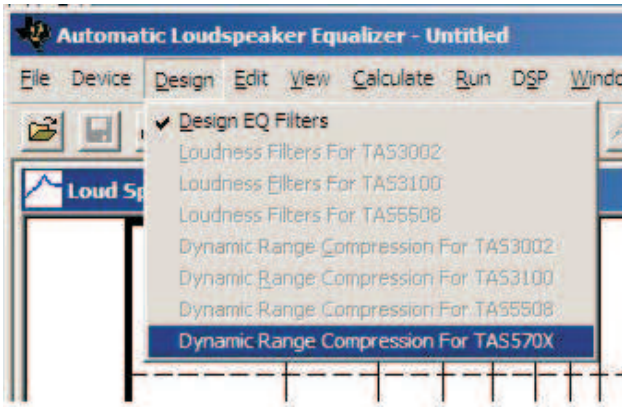

A new window appears along with the DRC dialog box. Users now can edit data for the DRC as shown in the following illustration.

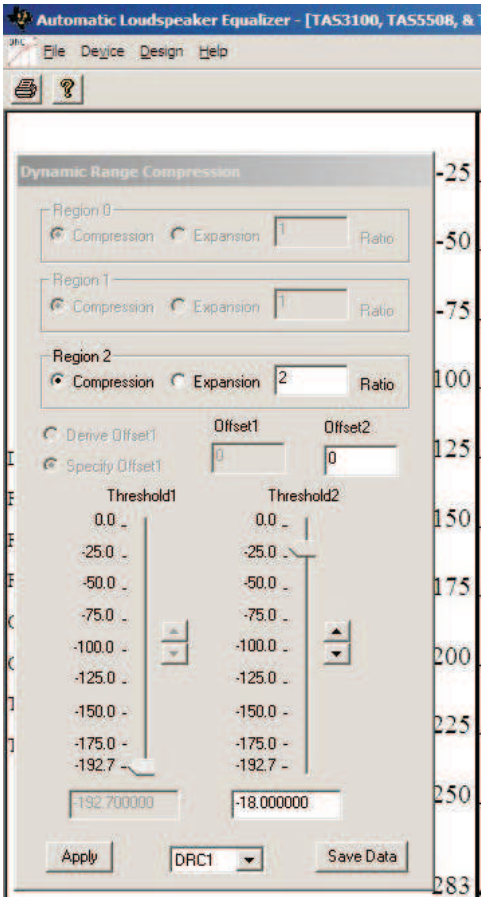

To see the drawing with the new data, click on the Apply button. The DRC combination box allows users to select to which DRC, 1 or 2, the data is applied. To save the data for the selected DRC, 1 or 2, click on the Save Data button.

5.3.1 Edit and Generate Alpha Filter Data

Continuing from the previous section, click on the Design pulldown menu, and select TAS570X Alpha Filter as shown in the following illustration.

An Alpha Filter dialog box appears as the following illustration shows that allows users to edit and generate Alpha Filter data. Users can generate Alpha Filter data for DRC1 or DRC2 by using the Select DRC box.

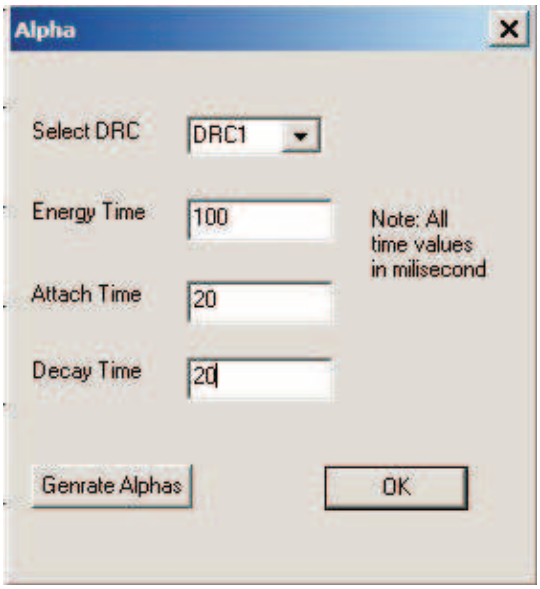

When finished generating Alpha Filter data for the DRCs, the user clicks the OK button to close the dialog.

5.3.2 Save DRC Data to File

To save the DRC data only, click the File pulldown menu, and select the Save As .DRC570X File item as shown in the following illustration. The File dialog box appears to allow users to save the DRC data.

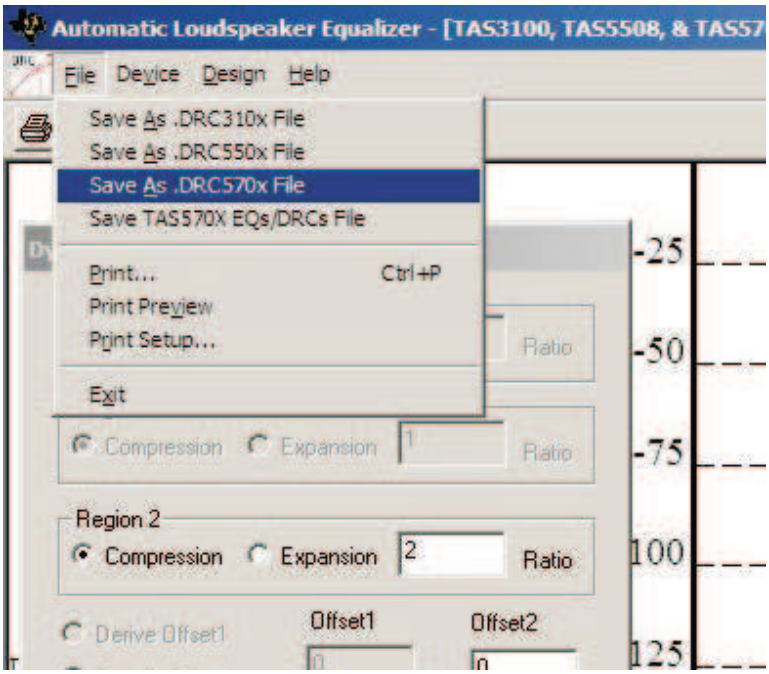

5.4 Save EQ/DRC/Alpha Data to File

To save all data including EQs, DRCs, and Alpha Filters, click the File pulldown menu, and select Save the TAS570X EQs/DRCs File item as shown in the following illustration. The File dialog box appears to allow the user to save all data.

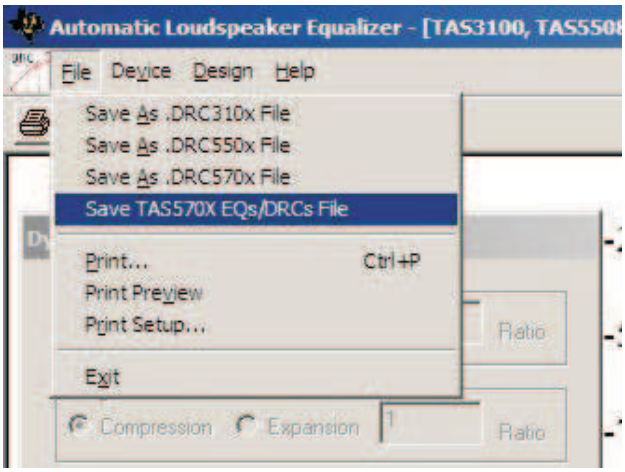

6 Jumpers and Control Utilities

6.1 Switches

Reset is an active-low function. Pressing the master reset switch (S2) resets the TAS5601.

7 Board Layouts, Bill of Materials, and Schematics

7.1 TAS5601EVM Board Layouts

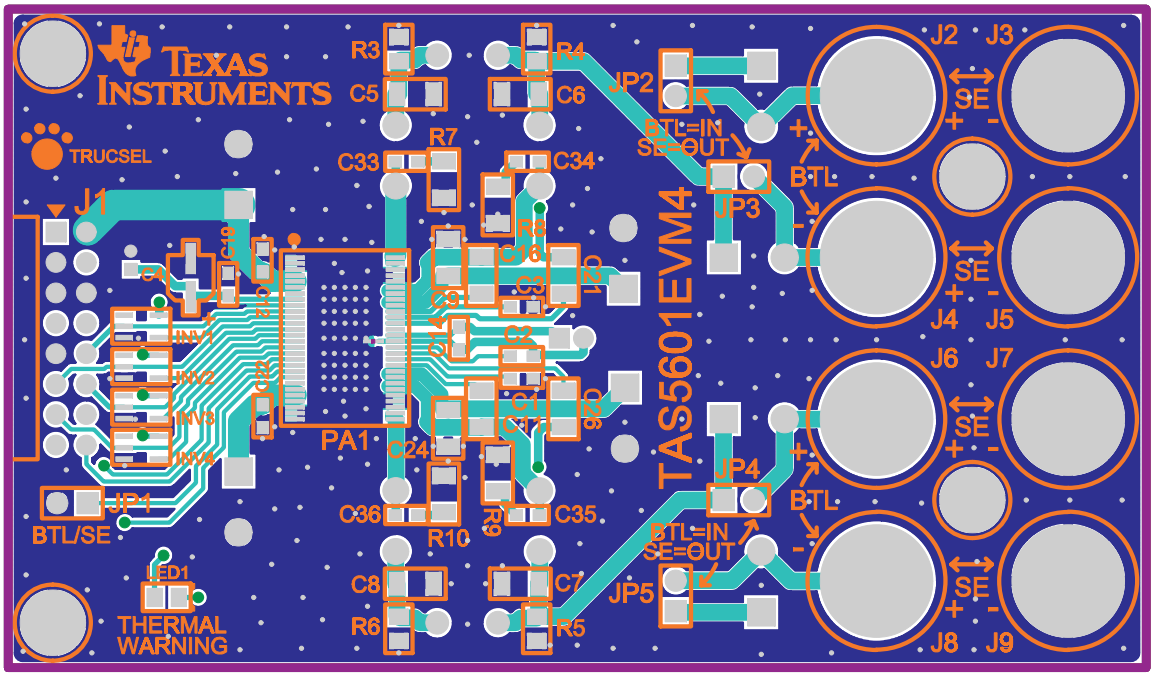

Figure 12. Top Silk Screen View

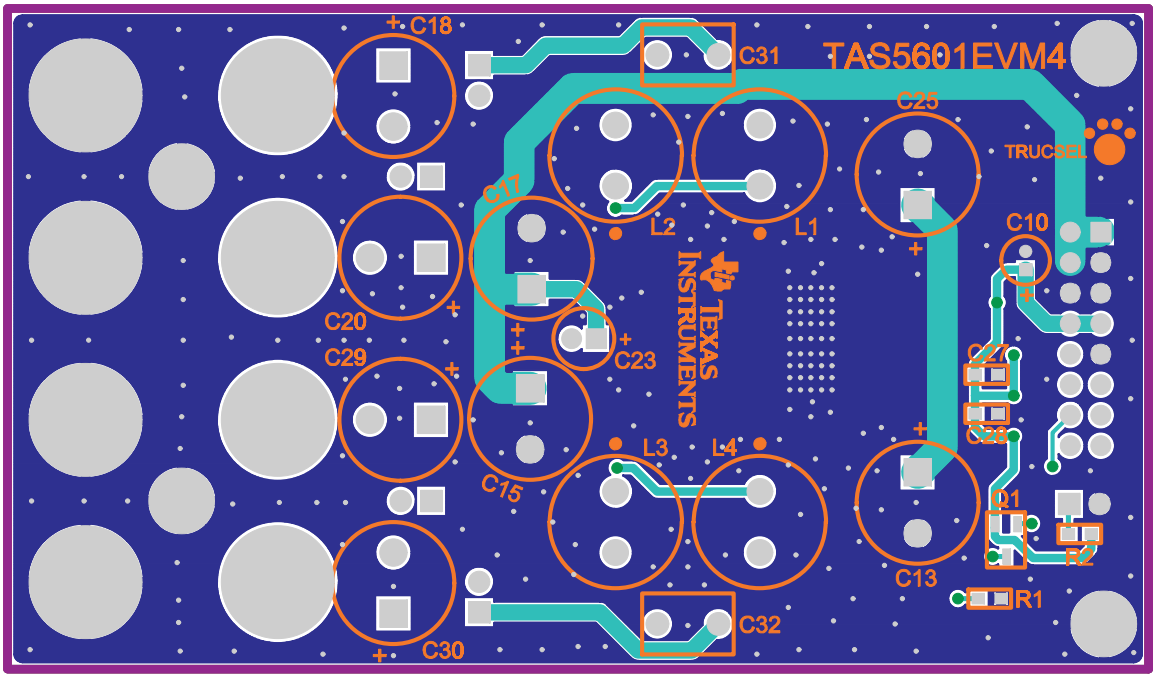

Figure 13. Bottom Silk Screen View

7.2 Bill of Materials

Table 2. Bill of Materials for TAS5601EVM

Item	Description	Ref Des	Qty	MFG	MFG:Part No.	Vendor	Vendor: Part No.	Alt. Part No.
TI SEMICONDUCTORS								
1	80W 4 CH Power Amp, HTSSOP56-DCA	PA1	1	Texas Instruments	TAS5601DCA	Texas Instruments	TAS5601DCA	No Alt. Part No.
2	Single Inverter Gate, SOT23-DBV5	INV1–INV4	4	Texas Instruments	SN74AHC1G14DBVR	Digi-Key	296-1092-2	296-1092-1
SEMICONDUCTORS								
3	Transistor PNP 50V PreBiased/4.7K 100mA SOT23-DBV3	Q1	1	Diodes, Inc.	DDTA143TCA-7	Digi-Key	DDTA143TCADITR	DDTA143TCADICT
4	LED, Yellow 2.0V SMD0805	LED1	1	Lumes Optical	SML-LXT0805YW-TR	Digi-Key	67-1554-2	67-1554-1
CAPACITORS								
5	CAP 1000 pF 50V CERM 0603 X7R	C33– C36	4	Panasonic	ECU-V1H102KBV	Digi-Key	PCC102BVTR	PCC102BVCT
6	CAP 0.1 µF 50V CERM 0603 X7R	C12, C14, C19, C22, C27, C28	6	Murata	GRM188R71H104KA93D	Digi-Key	490-1519-2	490-1519-1
7	CAP 1.0 µF 50V CERM 0603 X5S	C1–C3	3	Taiyo Yuden	UMK107C105KA-T	Digi-Key	587-1257-2	587-1257-1
8	CAP 0.1 µF 50V CERM 1206 X7R	C9, C24	2	Panasonic	ECJ-3VB1H104K	Digi-Key	PCC104BTR	PCC104BCT
9	CAP 0.22 µF 50V CERM 1206 X7R	C11, C16, C21, C26	4	TDK Corporation	C3216X7R1H224K	Digi-Key	445-1379-2	445-1379-1
10	CAP 0.68 µF 50V CERM 1206 X7R ROHS	C5–C8	4	Kemet	C1206C684K5RACTU	Digi-Key	399-3500-2	399-3500-1
11	CAP 0.33 µF 63V metal polyester	C31, C32	2	EPCOS Inc.	B32529C334J	Digi-Key	495-1108	No Alt. Part No.
12	CAP 10 µF 16V Alum Elec SMD VSA	C4	1	Panasonic	ECE-V1CS100SR	Digi-Key	PCE3061TR	PCE3061CT
13	CAP 10 µF 16V RAD Alum Elec KGA	C10	1	Panasonic	ECE-A1CKG100	Digi-Key	P910	No Alt. Part No.
14	CAP 15 µF 50V RAD Alum Elec FC	C23	1	Panasonic	EEU-FC1H150	Digi-Key	P10317	No Alt. Part No.
15	CAP 220 µF 50V RAD Alum Elec FC	C13, C15, C17, C25	4	Panasonic	EEU-FC1H221	Digi-Key	P10325	No Alt. Part No.
16	CAP 470 µF 35V RAD Alum Elec HE ROHS	C18, C20, C29, C30	4	Nichicon	UHE1V471MPD	Digi-Key	493-1582	No Alt. Part No.
RESISTORS								
17	RES 392 Ω 1/10W 1% SMD 0603	R1	1	Panasonic	ERJ-3EKF3920V	Digi-Key	P392HTR	P392HCT
18	RES 10 kΩ 1/16W 5% SMD 0603	R2	1	Panasonic	9C06031A1002JLHFT	Digi-Key	311-10KGTR	311-10KGCT
19	RES 4.7 kΩ 1/8W 1% SMD 0805	R3–R6	4	Yageo	9C08052A4701FKHFT	Digi-Key	311-4.70KCTR	311-4.70KCCT
20	RES 20 Ω 1/4W 1% SMD 1206	R7, R8, R9, R10	4	Yageo	9C12063A20R0FKHFT	Digi-Key	311-20.0FTR	311-20.0FCT
INDUCTORS								
21	Inducator, series 11RHBP, 22 µµH	L1–L4	4	Toko America	A7503AY-220M	Sullins	A7503AY-220M	No Alt. Part No.
HEADERS								
22	Header, 2 pin male, PCB, Straight Gold ROHS	JP1–JP5	5	Sullins	PBC02SAAN	Digi-Key	S1011-02	No Alt. Part No.
23	Header, 2x8 pin male, PCB-RA, Gold POHS	J1	1	Sullins	PBC08SBAN	Digi-Key	S2111-08	No Alt. Part No.
BINDING POSTS								
24	Binding post, blue, TIN PCB ROHS	J4, J8	2	Pomona	3760-6	Mouser	565-3760-6	No Alt. Part No.
25	Binding post, green, TIN PCB ROHS	J3, J5, J7, J9	4	Pomona	3760-5	Mouser	565-3760-5	No Alt. Part No.
26	Binding post, red, TIN PCB ROHS	J2, J6	2	Pomona	3760-2	Mouser	565-3760-2	No Alt. Part No.
SHUNTS								
27	Shunt, Black AU flash 0.100	JP1–JP5	5	Sullins	SPC02SYAN	Digi-Key	S9001	No Alt. Part No.
STANDOFFS AND HARDWARE								
28	Standoff 4-40 Threaded M/F 1.50 in. Alum-Hex	HW1–HW4	4	Keystone Electronics	S409	Digi-Key	8409K	No Alt. Part No.
29	Hex Nut, 4-40, Zinc/Steel	HW1–HW4	4	Building Fasteners	HNZ440	Digi-Key	H216	No Alt. Part No.
Component Count: 84								

7.3 Schematics

The schematics appear on following page.

BTL/SE AMPLIFIER

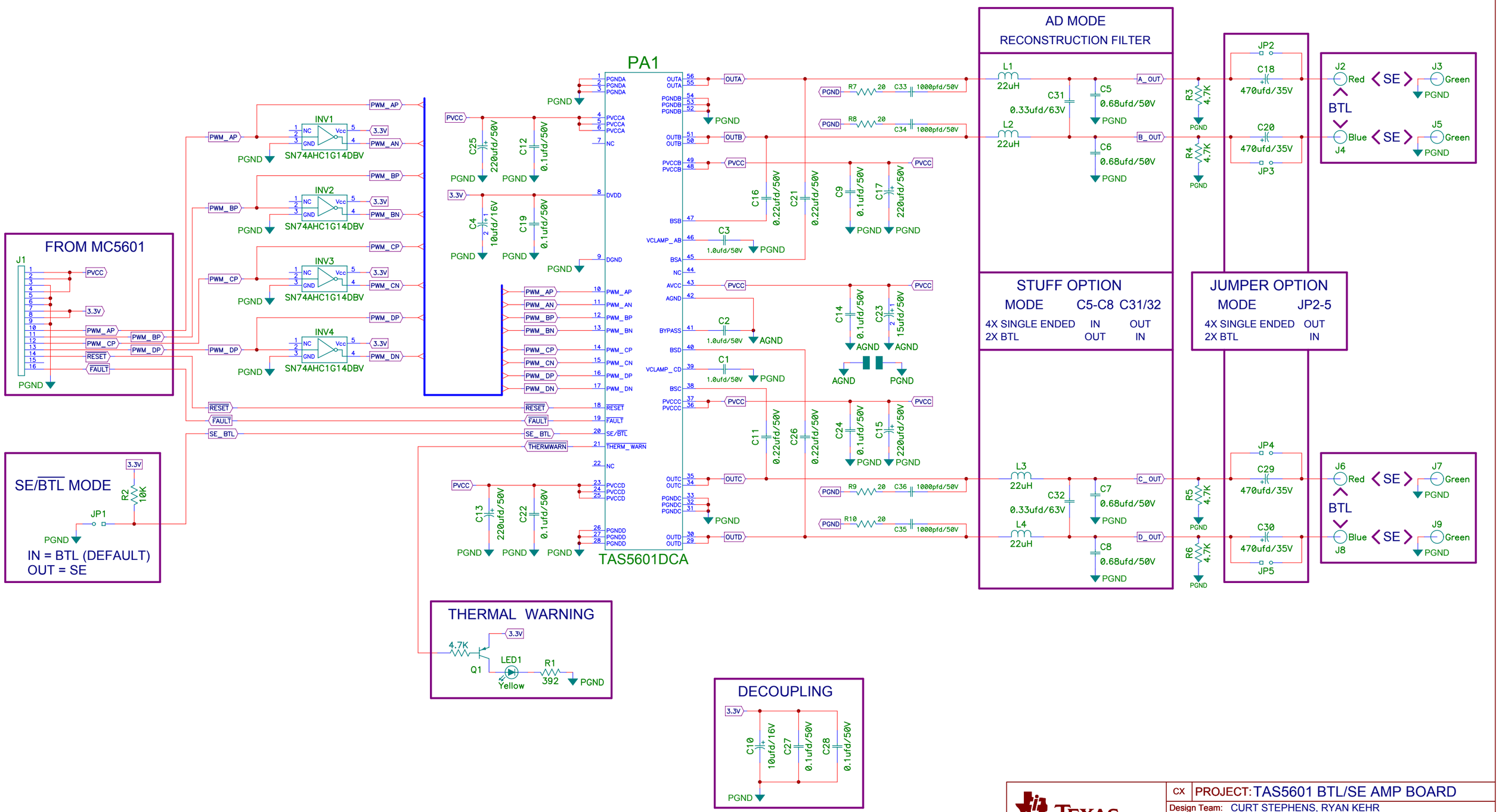

CX	PROJECT: TAS5601 BTL/SE AMP BOARD		
Design Team: CURT STEPHENS, RYAN KEHR			
Schematic Rev: NC	Mod: NC	PCB Rev: NC	Sheet 1 of 3
Save Date: NOVEMBER 1, 2007		Print Date Thu Nov 01, 2007	
Filename: TAS5601EVM4.SCH			Drawn By: LDN

TEXAS INSTRUMENTS

USB INTERFACE

ENGINEERING EVALUATION ONLY

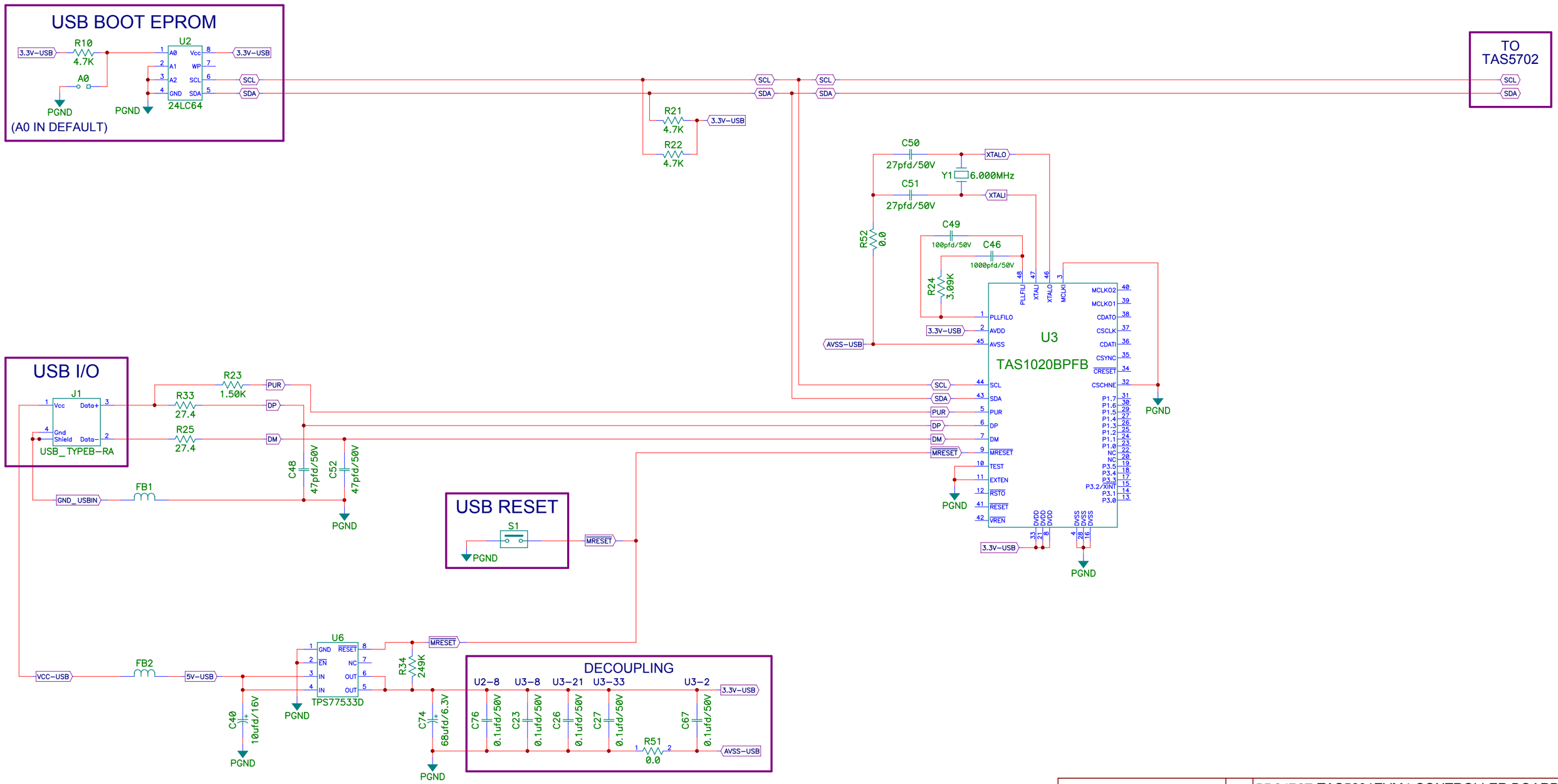

CX	PROJECT: TAS5601EVM4 CONTROLLER BOARD
Design Team: CURT STEPHENS	
Schematic Rev: NC	Mod: NC | PCB Rev: NC | Sheet 1 of 6
Save Date: OCTOBER 2, 2007	Print Date Tue Oct 02, 2007
Filename: MC5601.SCH	Drawn By: LDN

TEXAS INSTRUMENTS

SPDIF RECEIVER

ENGINEERING EVALUATION ONLY

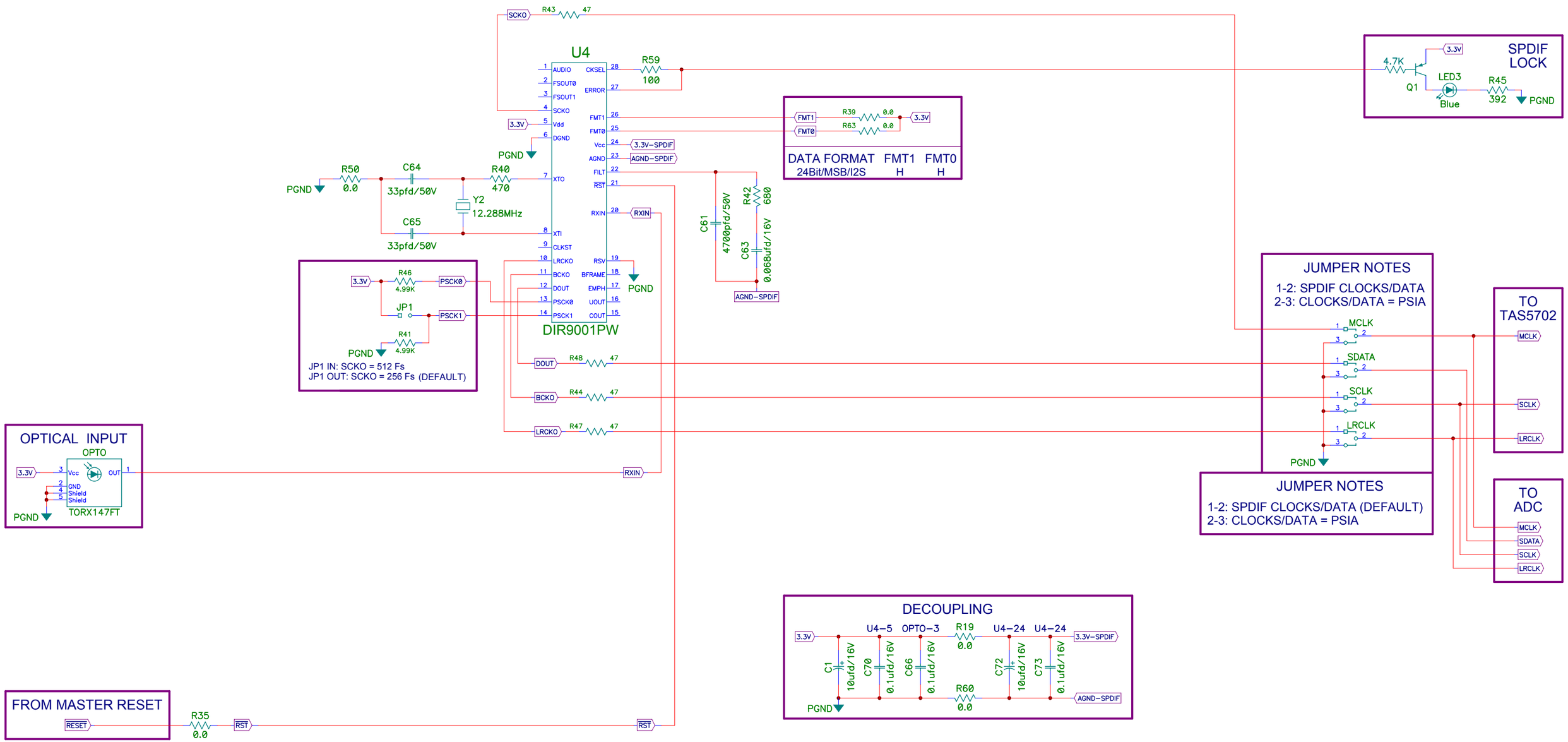

CX	PROJECT: TAS5601EVM4 CONTROLLER BOARD
Design Team:	CURT STEPHENS
Schematic Rev: NC	Mod: NC · PCB Rev: NC · Sheet 2 of 6
Save Date: OCTOBER 2, 2007	Print Date Tue Oct 02, 2007
Filename: MC5601.SCH	Drawn By: LDN

TEXAS INSTRUMENTS

ANALOG TO DIGITAL CONVERTER

ENGINEERING EVALUATION ONLY

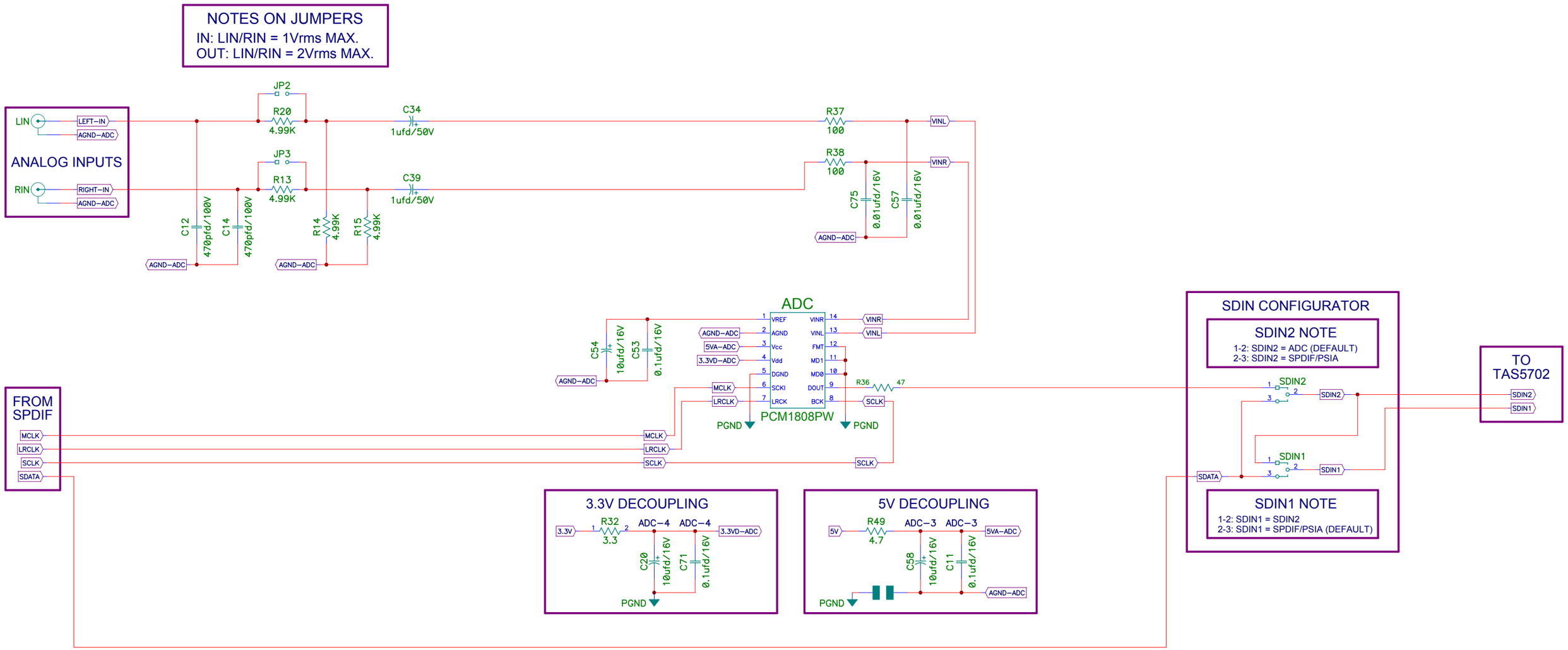

TEXAS INSTRUMENTS	CX	PROJECT: TAS5601EVM4 CONTROLLER BOARD	
	Design Team: CURT STEPHENS		
	Schematic Rev: NC	Mod: NC	PCB Rev: NC	Sheet 3 of 6
	Save Date: OCTOBER 2, 2007	Print Date Tue Oct 02, 2007	
	Filename: MC5601.SCH	Drawn By: LDN	

TAS5702 I/O

ENGINEERING EVALUATION ONLY

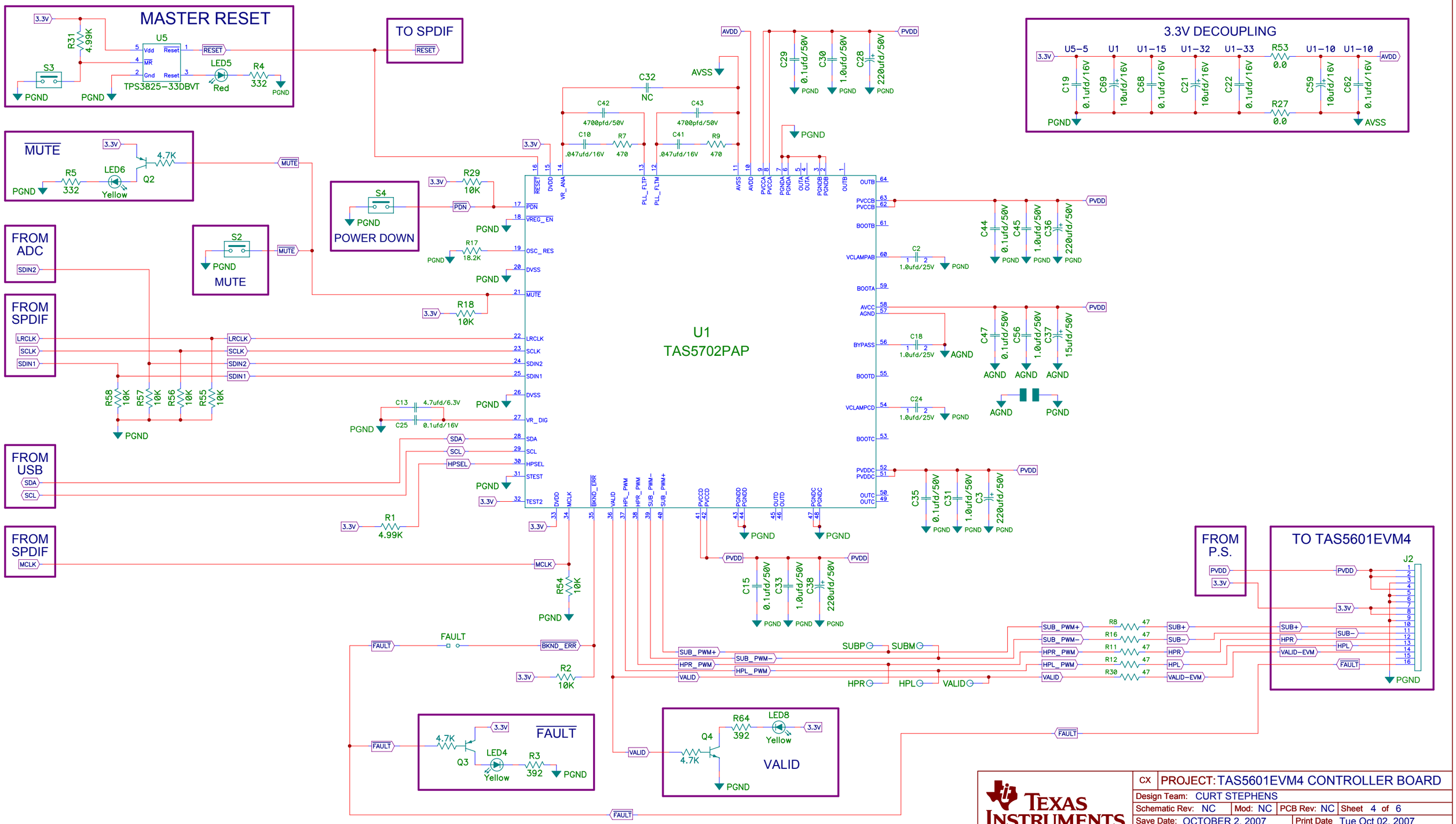

CX	PROJECT: TAS5601EVM4 CONTROLLER BOARD
Design Team:	CURT STEPHENS
Schematic Rev: NC	Mod: NC · PCB Rev: NC · Sheet 4 of 6
Save Date:	OCTOBER 2, 2007 · Print Date Tue Oct 02, 2007
Filename:	MC5601.SCH · Drawn By: LDN

TEXAS INSTRUMENTS

POWER SUPPLIES

ENGINEERING EVALUATION ONLY

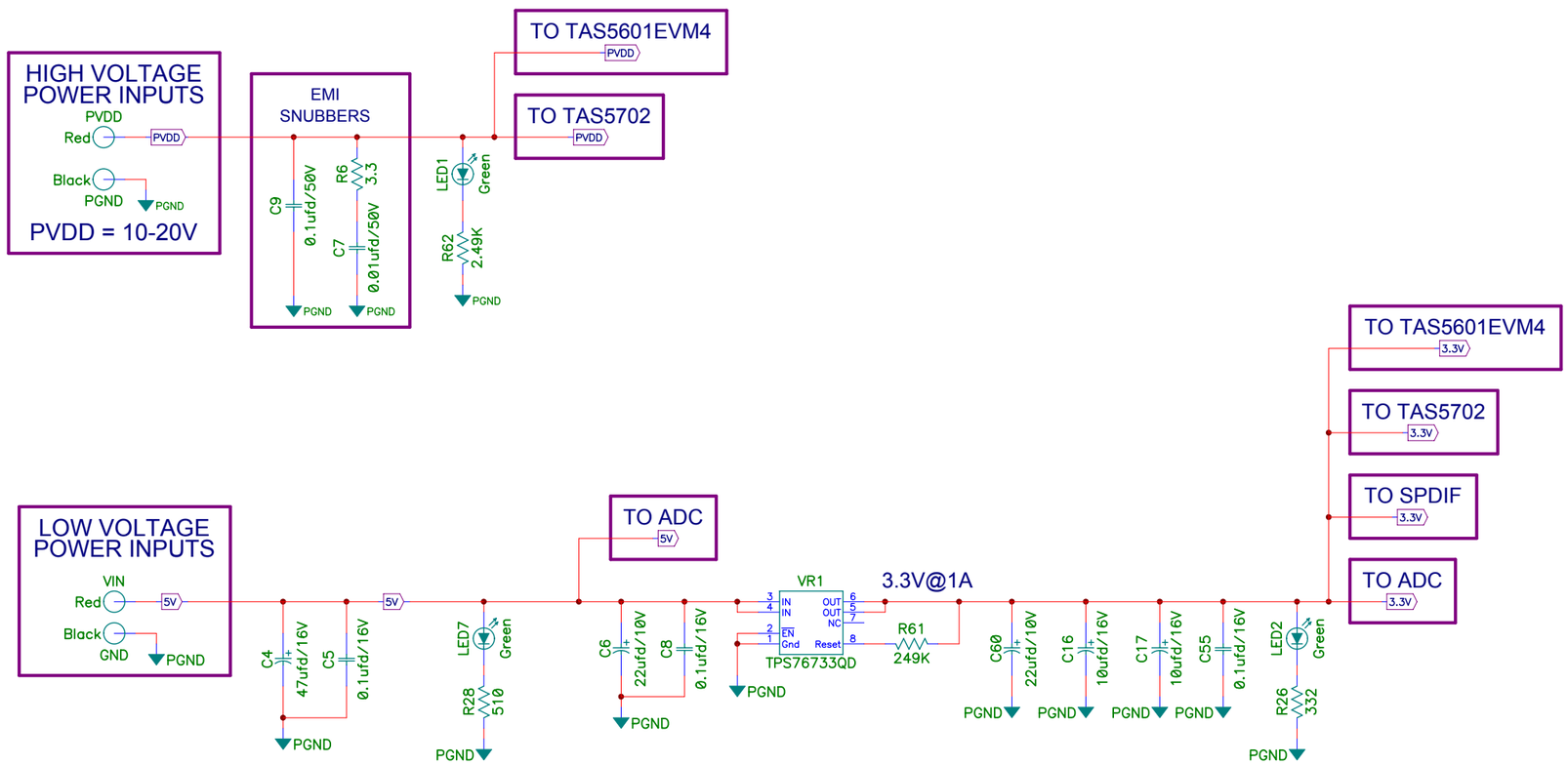

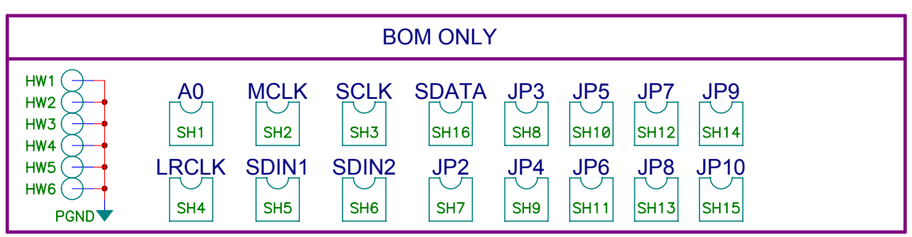

TEXAS INSTRUMENTS	CX	PROJECT: TAS5601EVM4 CONTROLLER BOARD	
	Design Team: CURT STEPHENS		
	Schematic Rev: NC	Mod: NC	PCB Rev: NC	Sheet 5 of 6
	Save Date: OCTOBER 2, 2007	Print Date Tue Oct 02, 2007	
	Filename: MC5601.SCH	Drawn By: LDN	

8 Related Documentation From Texas Instruments

Table 3 contains a list of data manuals that have detailed descriptions of the integrated circuits and other components used in the design of the TAS5601EVM. The data manuals can be obtained at the URL http://www.ti.com.

Table 3. Related Documentation from Texas Instruments

Part Number	Literature Number
TAS5706	SLOS550
DIR9001	SLES198
PCM1808	SLES177
TPA6110A2	SLOS314
UA7805C	SLVS056
TPS76733	SLVS208
TPS3825-33	SLVS165
TAS5601	SLAS585
TAS1020B	SLES025
TPS77533	SLVS232

EVALUATION BOARD/KIT IMPORTANT NOTICE

Texas Instruments (TI) provides the enclosed product(s) under the following conditions:

This evaluation board/kit is intended for use for **ENGINEERING DEVELOPMENT, DEMONSTRATION, OR EVALUATION PURPOSES ONLY** and is not considered by TI to be a finished end-product fit for general consumer use. Persons handling the product(s) must have electronics training and observe good engineering practice standards. As such, the goods being provided are not intended to be complete in terms of required design-, marketing-, and/or manufacturing-related protective considerations, including product safety and environmental measures typically found in end products that incorporate such semiconductor components or circuit boards. This evaluation board/kit does not fall within the scope of the European Union directives regarding electromagnetic compatibility, restricted substances (RoHS), recycling (WEEE), FCC, CE or UL, and therefore may not meet the technical requirements of these directives or other related directives.

Should this evaluation board/kit not meet the specifications indicated in the User's Guide, the board/kit may be returned within 30 days from the date of delivery for a full refund. THE FOREGOING WARRANTY IS THE EXCLUSIVE WARRANTY MADE BY SELLER TO BUYER AND IS IN LIEU OF ALL OTHER WARRANTIES, EXPRESSED, IMPLIED, OR STATUTORY, INCLUDING ANY WARRANTY OF MERCHANTABILITY OR FITNESS FOR ANY PARTICULAR PURPOSE.

The user assumes all responsibility and liability for proper and safe handling of the goods. Further, the user indemnifies TI from all claims arising from the handling or use of the goods. Due to the open construction of the product, it is the user's responsibility to take any and all appropriate precautions with regard to electrostatic discharge.

EXCEPT TO THE EXTENT OF THE INDEMNITY SET FORTH ABOVE, NEITHER PARTY SHALL BE LIABLE TO THE OTHER FOR ANY INDIRECT, SPECIAL, INCIDENTAL, OR CONSEQUENTIAL DAMAGES.

TI currently deals with a variety of customers for products, and therefore our arrangement with the user **is not exclusive.**

TI assumes **no liability for applications assistance, customer product design, software performance, or infringement of patents or services described herein.**

Please read the User's Guide and, specifically, the Warnings and Restrictions notice in the User's Guide prior to handling the product. This notice contains important safety information about temperatures and voltages. For additional information on TI's environmental and/or safety programs, please contact the TI application engineer or visit www.ti.com/esh.

No license is granted under any patent right or other intellectual property right of TI covering or relating to any machine, process, or combination in which such TI products or services might be or are used.

FCC Warning

This evaluation board/kit is intended for use for **ENGINEERING DEVELOPMENT, DEMONSTRATION, OR EVALUATION PURPOSES ONLY** and is not considered by TI to be a finished end-product fit for general consumer use. It generates, uses, and can radiate radio frequency energy and has not been tested for compliance with the limits of computing devices pursuant to part 15 of FCC rules, which are designed to provide reasonable protection against radio frequency interference. Operation of this equipment in other environments may cause interference with radio communications, in which case the user at his own expense will be required to take whatever measures may be required to correct this interference.

EVM WARNINGS AND RESTRICTIONS

It is important to operate this EVM within the input voltage range of -0.5 V to 4.1 V and the output voltage range of 1 Vrms.

Exceeding the specified input range may cause unexpected operation and/or irreversible damage to the EVM. If there are questions concerning the input range, please contact a TI field representative prior to connecting the input power.

Applying loads outside of the specified output range may result in unintended operation and/or possible permanent damage to the EVM. Please consult the EVM User's Guide prior to connecting any load to the EVM output. If there is uncertainty as to the load specification, please contact a TI field representative.

During normal operation, some circuit components may have case temperatures greater than 85°C. The EVM is designed to operate properly with certain components above 85°C as long as the input and output ranges are maintained. These components include but are not limited to linear regulators, switching transistors, pass transistors, and current sense resistors. These types of devices can be identified using the EVM schematic located in the EVM User's Guide. When placing measurement probes near these devices during operation, please be aware that these devices may be very warm to the touch.

Mailing Address: Texas Instruments, Post Office Box 655303, Dallas, Texas 75265
Copyright © 2008, Texas Instruments Incorporated

IMPORTANT NOTICE

Texas Instruments Incorporated and its subsidiaries (TI) reserve the right to make corrections, modifications, enhancements, improvements, and other changes to its products and services at any time and to discontinue any product or service without notice. Customers should obtain the latest relevant information before placing orders and should verify that such information is current and complete. All products are sold subject to TI's terms and conditions of sale supplied at the time of order acknowledgment.

TI warrants performance of its hardware products to the specifications applicable at the time of sale in accordance with TI's standard warranty. Testing and other quality control techniques are used to the extent TI deems necessary to support this warranty. Except where mandated by government requirements, testing of all parameters of each product is not necessarily performed.

TI assumes no liability for applications assistance or customer product design. Customers are responsible for their products and applications using TI components. To minimize the risks associated with customer products and applications, customers should provide adequate design and operating safeguards.

TI does not warrant or represent that any license, either express or implied, is granted under any TI patent right, copyright, mask work right, or other TI intellectual property right relating to any combination, machine, or process in which TI products or services are used. Information published by TI regarding third-party products or services does not constitute a license from TI to use such products or services or a warranty or endorsement thereof. Use of such information may require a license from a third party under the patents or other intellectual property of the third party, or a license from TI under the patents or other intellectual property of TI.

Reproduction of TI information in TI data books or data sheets is permissible only if reproduction is without alteration and is accompanied by all associated warranties, conditions, limitations, and notices. Reproduction of this information with alteration is an unfair and deceptive business practice. TI is not responsible or liable for such altered documentation. Information of third parties may be subject to additional restrictions.

Resale of TI products or services with statements different from or beyond the parameters stated by TI for that product or service voids all express and any implied warranties for the associated TI product or service and is an unfair and deceptive business practice. TI is not responsible or liable for any such statements.

TI products are not authorized for use in safety-critical applications (such as life support) where a failure of the TI product would reasonably be expected to cause severe personal injury or death, unless officers of the parties have executed an agreement specifically governing such use. Buyers represent that they have all necessary expertise in the safety and regulatory ramifications of their applications, and acknowledge and agree that they are solely responsible for all legal, regulatory and safety-related requirements concerning their products and any use of TI products in such safety-critical applications, notwithstanding any applications-related information or support that may be provided by TI. Further, Buyers must fully indemnify TI and its representatives against any damages arising out of the use of TI products in such safety-critical applications.

TI products are neither designed nor intended for use in military/aerospace applications or environments unless the TI products are specifically designated by TI as military-grade or "enhanced plastic." Only products designated by TI as military-grade meet military specifications. Buyers acknowledge and agree that any such use of TI products which TI has not designated as military-grade is solely at the Buyer's risk, and that they are solely responsible for compliance with all legal and regulatory requirements in connection with such use.

TI products are neither designed nor intended for use in automotive applications or environments unless the specific TI products are designated by TI as compliant with ISO/TS 16949 requirements. Buyers acknowledge and agree that, if they use any non-designated products in automotive applications, TI will not be responsible for any failure to meet such requirements.

Following are URLs where you can obtain information on other Texas Instruments products and application solutions:

Products		**Applications**	
Amplifiers	amplifier.ti.com	Audio	www.ti.com/audio
Data Converters	dataconverter.ti.com	Automotive	www.ti.com/automotive
DSP	dsp.ti.com	Broadband	www.ti.com/broadband
Clocks and Timers	www.ti.com/clocks	Digital Control	www.ti.com/digitalcontrol
Interface	interface.ti.com	Medical	www.ti.com/medical
Logic	logic.ti.com	Military	www.ti.com/military
Power Mgmt	power.ti.com	Optical Networking	www.ti.com/opticalnetwork
Microcontrollers	microcontroller.ti.com	Security	www.ti.com/security
RFID	www.ti-rfid.com	Telephony	www.ti.com/telephony
RF/IF and ZigBee® Solutions	www.ti.com/lprf	Video & Imaging	www.ti.com/video
		Wireless	www.ti.com/wireless

Mailing Address: Texas Instruments, Post Office Box 655303, Dallas, Texas 75265
Copyright © 2008, Texas Instruments Incorporated